Si3218x Data Short: ProSLIC® Single-Chip FXS Solution

The Si3218x devices are pin-compatible single-channel ProSLIC® products that implement a complete foreign exchange station (FXS) telephony interface solution in accordance with all relevant global specifications. The Si3218x ProSLIC ICs operate from a 3.3 V supply and interface to standard PCM/SPI or 3-wire ISI digital interfaces with 3.3 V or 1.8 V I/O. The Si3218x integrated dc-dc controller automatically generates the optimal battery voltages required for each linestate. Si3218x ICs are available with voltage rating of –106 V. The Si3218x devices are available in a 5x6 mm 36-pin QFN package and a 6x6 mm 40-pin QFN Package.

Applications:

- VoIP Gateways and Routers
- xDSL IADs
- Optical Network Terminals/Units (ONT/U)
- Analog Terminal Adapters (ATA)
- Cable eMTA
- Wireless Fixed Terminals (WFT)
- Wireless Local Loop (WLL)
- WiMAX CPE

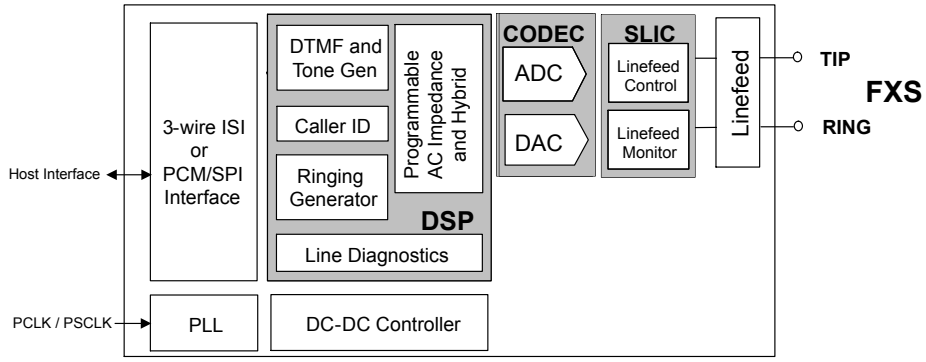

Si3218x

Functional Block Diagram

KEY FEATURES

- Complete FXS solution in a single 5x6 mm or 6x6 mm package
- Performs all BORSCHT functions
- Ideal for short to medium loops
- Global programmability
- Patented low-power ringing
- Simplified configuration and diagnostics
  - Supported by ProSLIC API
  - Audio diagnostics with loopback
  - Integrated test load
- Ultra low power consumption
- Wideband voice support
- On-hook transmission
- Loop or ground start operation
- Smooth polarity reversal
- A-Law/µ-Law companding, linear PCM
- Flexible integrated tracking dc-dc controller supporting patent-pending low-cost capacitive boost configuration
- Software-programmable parameters:
  - Ringing frequency, amplitude, cadence, and waveshape
  - Two-wire ac impedance
  - Transhybrid balance
  - DC current loop feed (10–45 mA)
  - Loop closure and ring trip thresholds
  - Ground key detect threshold
- Pulse metering
- DTMF generation
- DTMF detection (Si32181/3/5)
- 3.3 V operation
- Support for 1.8 V I/O
- Maximum battery up to –106 V
- Pb-free/RoHS-compliant packaging
- Two digital interface options
  - 3-wire Integrated Serial Interface (ISI) or PCM/SPI interface

Table 1.1. Si3218x Ordering Guide

P/N	Description	Package Type[2]	Max V_{BAT}	Temperature
Si32180-A-FM	Wideband FXS, selectable ISI/PCM interface, daisy-chain mode, practical MLT	QFN40	–106 V	0 to 70 °C
Si32180-A-GM	Wideband FXS, selectable ISI/PCM interface, daisy-chain mode, practical MLT	QFN40	–106 V	-40 to 85 °C
Si32181-A-FM	Wideband FXS, selectable ISI/PCM interface, daisy-chain mode, practical MLT, DTMF detection	QFN40	–106 V	0 to 70 °C
Si32181-A-GM	Wideband FXS, selectable ISI/PCM interface, daisy-chain mode, practical MLT, DTMF detection	QFN40	–106 V	-40 to 85 °C
Si32182-A-FM	Wideband FXS, ISI interface, parametric MLT	QFN36	–106 V	0 to 70 °C
Si32182-A-GM	Wideband FXS, ISI interface, parametric MLT	QFN36	–106 V	–40 to 85 °C
Si32183-A-FM	Wideband FXS, ISI interface, parametric MLT, DTMF detection	QFN36	–106 V	0 to 70 °C
Si32183-A-GM	Wideband FXS, ISI interface, parametric MLT, DTMF detection	QFN36	–106 V	–40 to 85 °C
Si32184-A-FM	Wideband FXS, PCM interface, parametric MLT	QFN40	–106 V	0 to 70 °C
Si32184-A-GM	Wideband FXS, PCM interface, parametric MLT	QFN40	–106 V	–40 to 85 °C
Si32185-A-FM	Wideband FXS, PCM interface, parametric MLT, DTMF detection	QFN40	–106 V	0 to 70 °C
Si32185-A-GM	Wideband FXS, PCM interface, parametric MLT, DTMF detection	QFN40	–106 V	–40 to 85 °C

Note:

1. Adding the suffix "R" to the part number (e.g. Si3218x-A-FMR) denotes tape and reel.
2. QFN - Quad-Flat No-leads.

Table 1.2. Ordering Guide—Si3218x Evaluation Kits

Part Number	Description	V_{BAT} Max
Si32183ACB10SL0EVB	ISI Wideband FXS with DTMF detection low-cost capacitive boost dc-dc converter EVB	–100 V
Si32185ACB10SL0EVB	PCM interface, wideband FXS with DTMF detection low-cost capacitive boost dc-dc converter EVB	–100 V